Superior
PRODUCT HANDLING SOLUTIONS

ILLUSTRATED PARTS BREAKOUT

500072
BDII Dropper

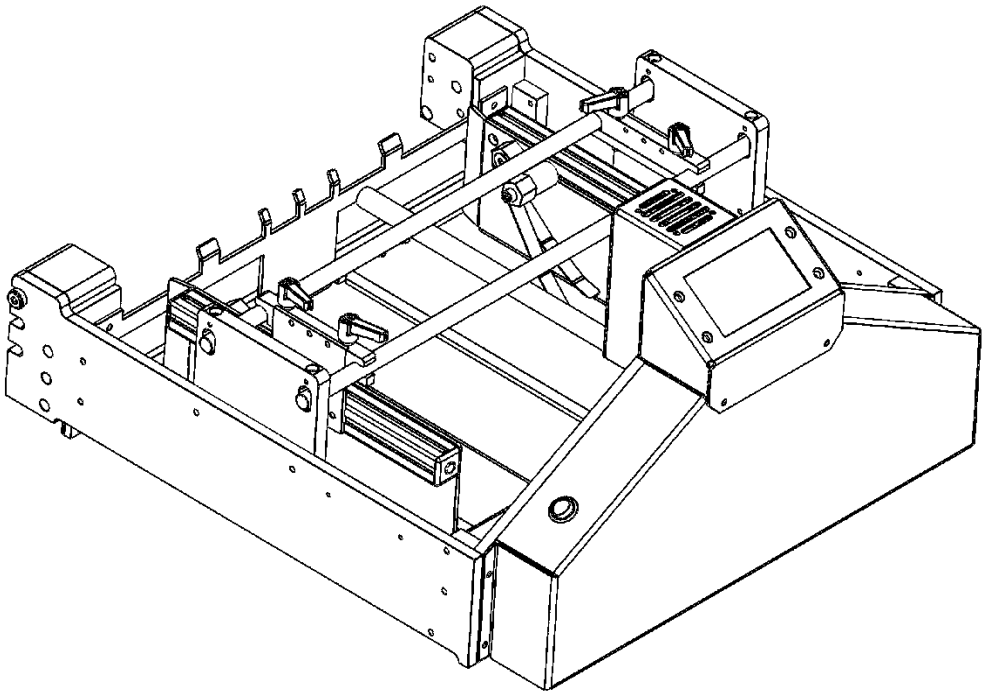

Table of Contents:

Parts: _____ **2**

Order Placing: _____ *2*

Illustrated parts breakout: _____ *2*

Parts:

Order Placing:

Contact Superior-PHS for all parts needed.

Our contact information can be found at: www.superior-phs.com

Illustrated parts breakout:

See the following pages:

BDII DROPPER

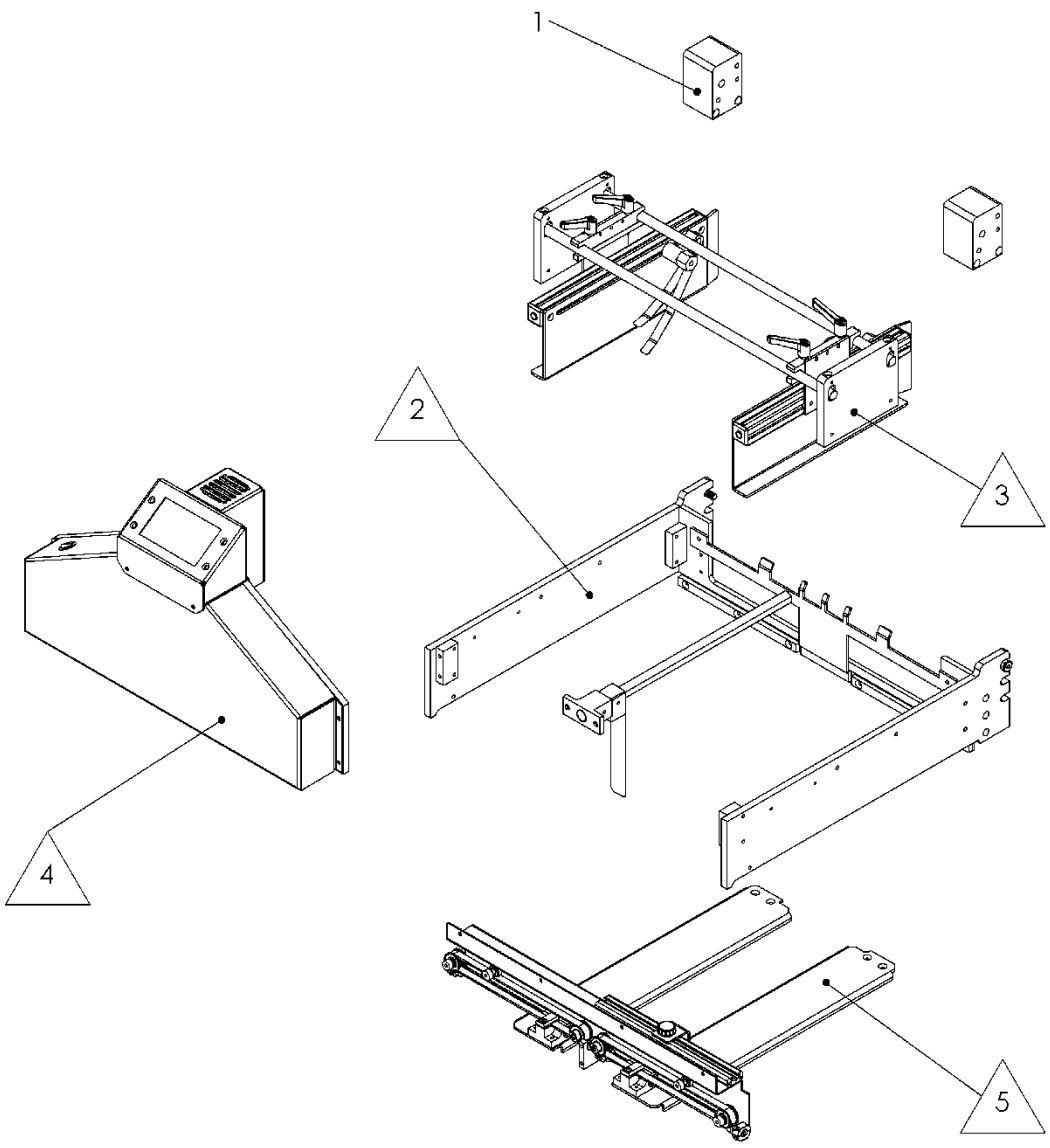

ITEM	PART	DESCRIPTION	QTY
1	300260	FRONT PIVOT MOUNT	2
2	400743	BASE ASSEMBLY	1
3	400744	SIDE GUIDE ASSY	1
4	400759	ELECTRONICS ASSY	1
5	400767	PADDLE DROP ASSY	1

PROPRIETARY AND CONFIDENTIAL
THE INFORMATION CONTAINED IN THIS DRAWING IS THE SOLE PROPERTY OF SUPERIOR PAPER HANDLING SOLUTIONS. ANY REPRODUCTION IN PART OR AS A WHOLE WITHOUT THE WRITTEN PERMISSION OF SUPERIOR PAPER HANDLING SOLUTIONS IS STRICTLY PROHIBITED.

Superior PRODUCT HANDLING SOLUTIONS

Assembly Number:
500072

BASE ASSEMBLY

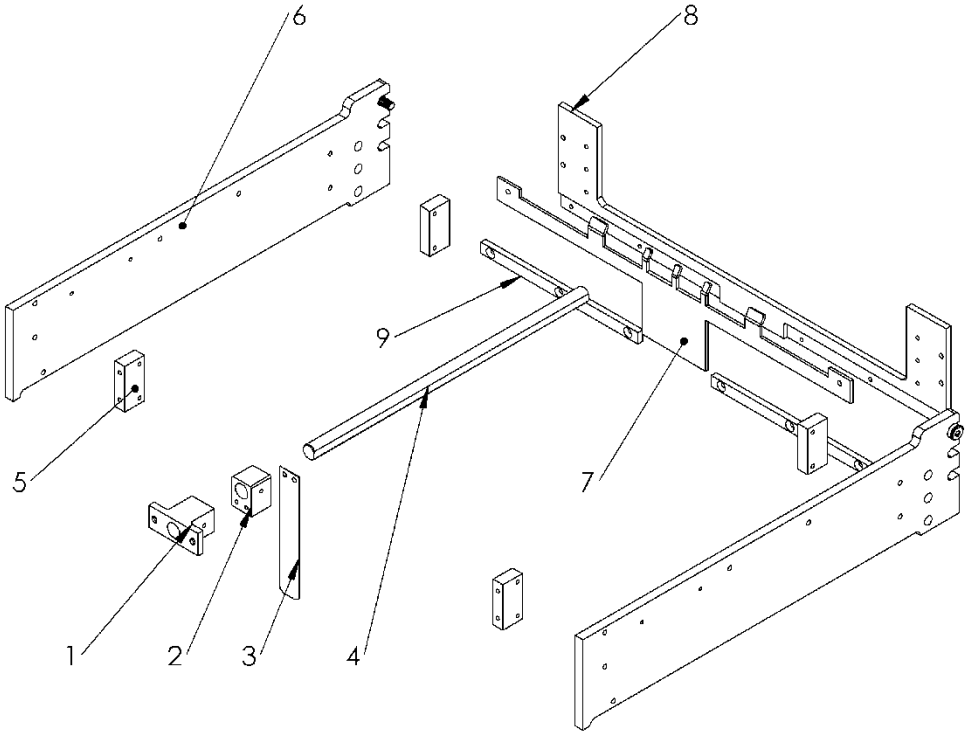

ITEM	PART	DESCRIPTION	QTY
1	303662	OVERHEAD SHAFT MOUNT	1
2	303665	BACKSTOP MOUNT	1
3	303666	SPRING STEEL BACK STOP	1
4	303639	BACK STOP SLIDE SHAFT	1
5	303664	CORNER ASSY BLOCKS	4
6	303654	SIDE PLATE	2
7	303656	FINGER FRONT STOP	1
8	303677	FRONT PLATE	1
9	303689	DROP PLATE SLIDE	2

PROPRIETARY AND CONFIDENTIAL
THE INFORMATION CONTAINED IN THIS DRAWING IS THE SOLE PROPERTY OF SUPERIOR PAPER HANDLING SOLUTIONS. ANY REPRODUCTION IN PART OR AS A WHOLE WITHOUT THE WRITTEN PERMISSION OF SUPERIOR PAPER HANDLING SOLUTIONS IS PROHIBITED.

Superior PRODUCT HANDLING SOLUTIONS

Assembly Number:
400743

SIDE GUIDE ASSY

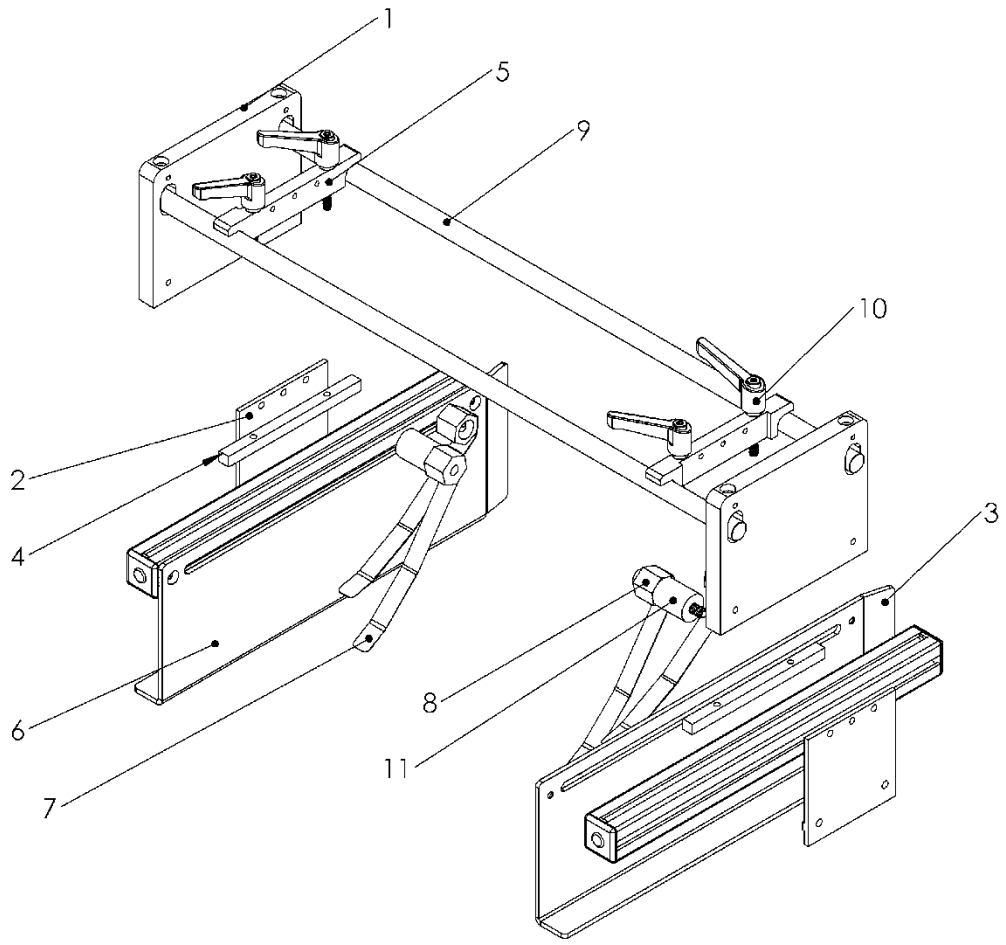

ITEM	PART	DESCRIPTION	QTY
1	303644	SIDE GUIDE BAR BRACKET	2
2	303640	SIDE GUIDE BRACKET B	2
3	303641	SIDE GUIDE LEFT	1
4	303642	SIDE GUIDE CLAMPING BAR	2
5	303643	SIDE GUIDE BRACKET A	2
6	303646	SIDE GUIDE RIGHT	1
7	303647	KNOCKDOWN SPRING	4
8	303648	SPRING MOUNT	4
9	303687	SIDE GUIDE BAR	2
10	351043	THREADED HANDLE	4
11	351044	SPACER	2

PROPRIETARY AND CONFIDENTIAL
THE INFORMATION CONTAINED IN THIS DRAWING IS THE SOLE PROPERTY OF SUPERIOR PAPER HANDLING SOLUTIONS. ANY REPRODUCTION IN PART OR AS A WHOLE WITHOUT THE WRITTEN PERMISSION OF SUPERIOR PAPER HANDLING SOLUTIONS IS PROHIBITED.

Superior PRODUCT HANDLING SOLUTIONS

Assembly Number:
400744

ELECTRONICS ASSY

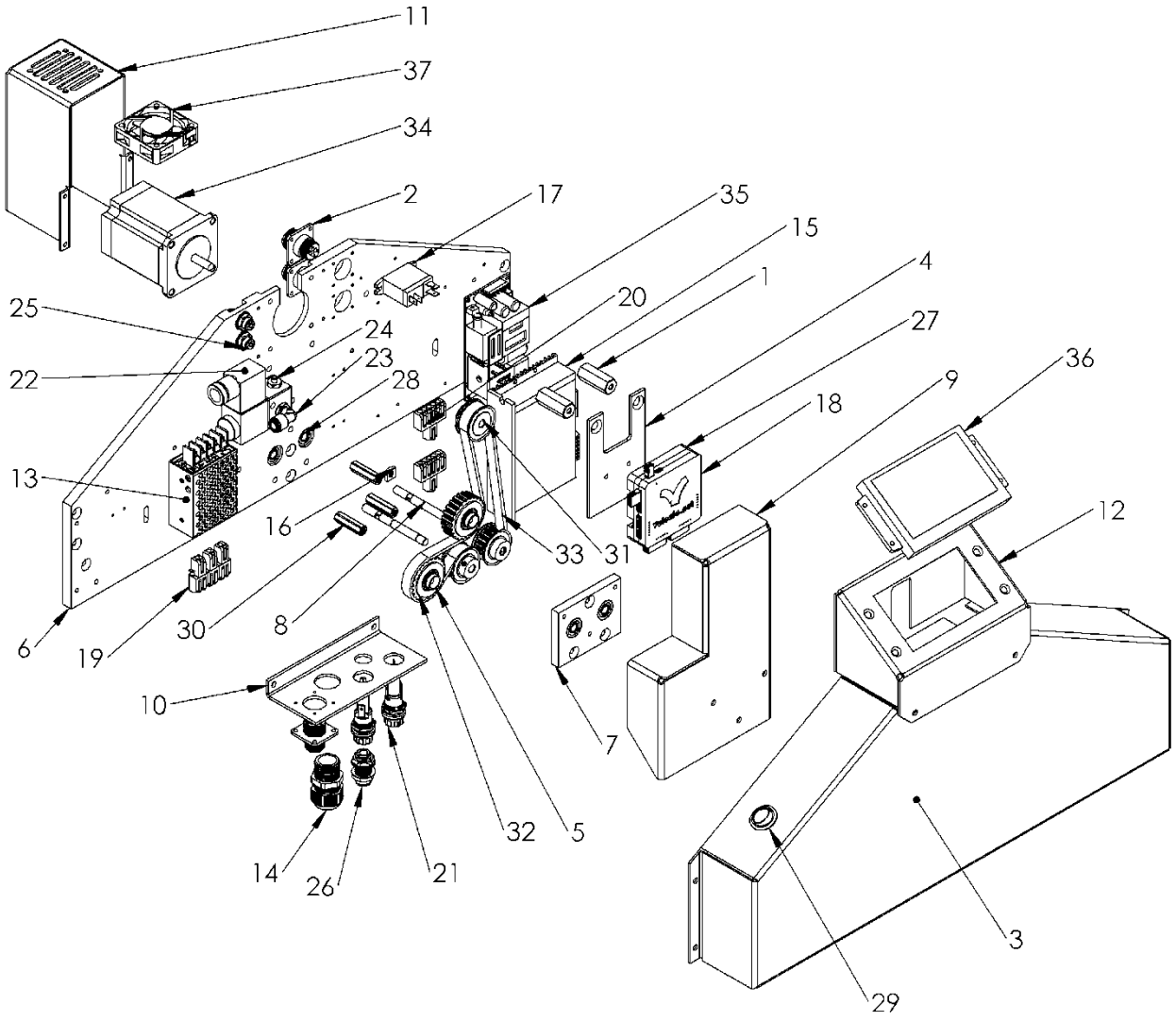

PROPRIETARY AND CONFIDENTIAL
THE INFORMATION CONTAINED IN THIS DRAWING IS THE SOLE PROPERTY OF SUPERIOR PAPER HANDLING SOLUTIONS. ANY REPRODUCTION IN PART OR AS A WHOLE WITHOUT THE WRITTEN PERMISSION OF SUPERIOR PAPER HANDLING SOLUTIONS IS PROHIBITED.

Superior PRODUCT HANDLING SOLUTIONS

Assembly Number:
400759

ELECTRONICS ASSY

ITEM	PART	DESCRIPTION	QTY
1	100237	STANDOFF	2
2	112039	4 PIN RECEPTACLE	3
3	303369	MAIN COVER	2
4	303639	PLC MOUNT PLATE	1
5	303649	TENSIONING PULLEY SHAFT	2
6	303653	MAIN PLATE	1
7	303660	PULLEY MOUNT BRACKET	1
8	303661	DRIVE PULLEY SHAFT	2
9	303668	PULLEY COVER	1
10	303674	ELECTRICAL INPUT PANEL	1
11	303675	MOTOR COVER	1
12	303676	SCREEN ENCLOSURE	1
13	350764	24V POWER SPPLY	1
14	350773	CORD GRIP	1
15	350826	MOTOR DRIVE	1
16	350897	SQUARE NUT	1
17	350899	RELAY	1
18	350903	PLC	1
19	350916-2	BUTT TERM - 1IN/2OUT	3
20	350916-5	BUTT TERM - 1IN/5OUT	2
21	350917	FUSEHOLDER	2
22	351045	3/2 SOLENOID VALVE	1
23	351046	90° AIR CONNECTOR	1
24	351047	FITTING	1
25	351048	1/8 PANEL PASS THRU CONNECTOR	2
26	351049	1/4 PANEL PASS THRU CONNECTOR	1
27	351061	PLC MOUNT	1
28	351080	BEARING	4
29	351081	ROCKER SWITCH	1
30	351082	STANDOFF	3
31	351083	TIMING PULLEY	3
32	351084	IDLER TIMING PULLEY	2
33	351085	DOUBLE SIDE TIMING BELT	1
34	351086	MOTOR	1
35	351087	48V POWER SUPPLY	1
36	351088	HMI	1
37	351089	FAN	1

PROPRIETARY AND CONFIDENTIAL
THE INFORMATION CONTAINED IN THIS DRAWING IS THE SOLE PROPERTY OF SUPERIOR PAPER HANDLING SOLUTIONS. ANY REPRODUCTION IN PART OR AS A WHOLE WITHOUT THE WRITTEN PERMISSION OF SUPERIOR PAPER HANDLING SOLUTIONS IS PROHIBITED.

Superior PRODUCT HANDLING SOLUTIONS

Assembly Number:
400759

PADDLE DROP ASSY

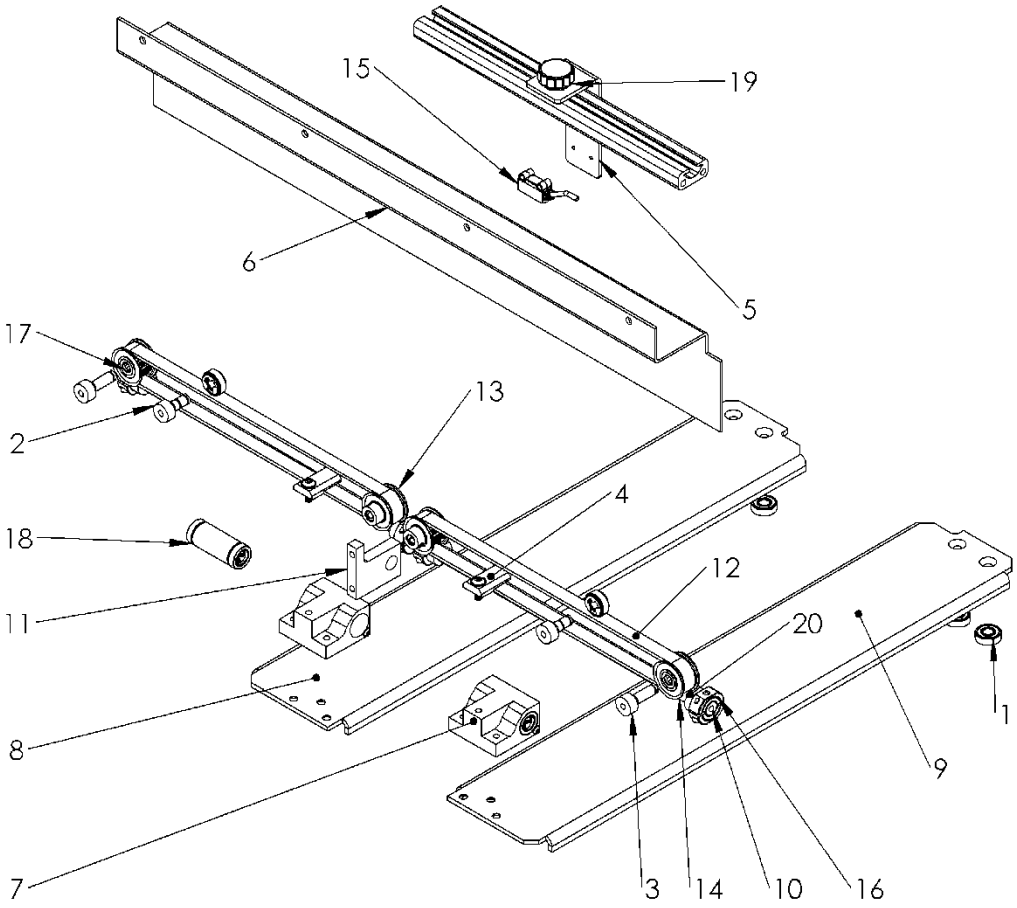

ITEM	PART	DESCRIPTION	QTY
1	100683	BEARING	6
2	303650	BEARING TENSIONER SHAFT	2
3	303651	IDLER SHAFT	2
4	303659	BELT CLAMP B	2
5	303671	SENSOR BRACKET	1
6	303667	LINEAR BELT COVER	1
7	303672	BEARING BRACKET	2
8	303678	DROP PLATE RIGHT	1
9	303679	DROP PLATE LEFT	1
10	303688	SLIDE SHAFT	1

ITEM	PART	DESCRIPTION	QTY
11	303673	MID SHAFT HOLDER	1
12	35190	TIMING BELT	2
13	351091	TIMING PULLEY	2
14	351092	TIMING PULLEY W/PRESSED IDLER BEARING	2
15	100387B	SENSOR	1
16	351093	SHAFT COLLAR	4
17	351094	BEARING	2
18	350195	LINEAR BEARING	2
19	351096	KNOB	1
20	351097	FELT BUMPER	4

PROPRIETARY AND CONFIDENTIAL
THE INFORMATION CONTAINED IN THIS DRAWING IS THE SOLE PROPERTY OF SUPERIOR PAPER HANDLING SOLUTIONS. ANY REPRODUCTION IN PART OR AS A WHOLE WITHOUT THE WRITTEN PERMISSION OF SUPERIOR PAPER HANDLING SOLUTIONS IS PROHIBITED.

Superior PRODUCT HANDLING SOLUTIONS

Assembly Number:
400767